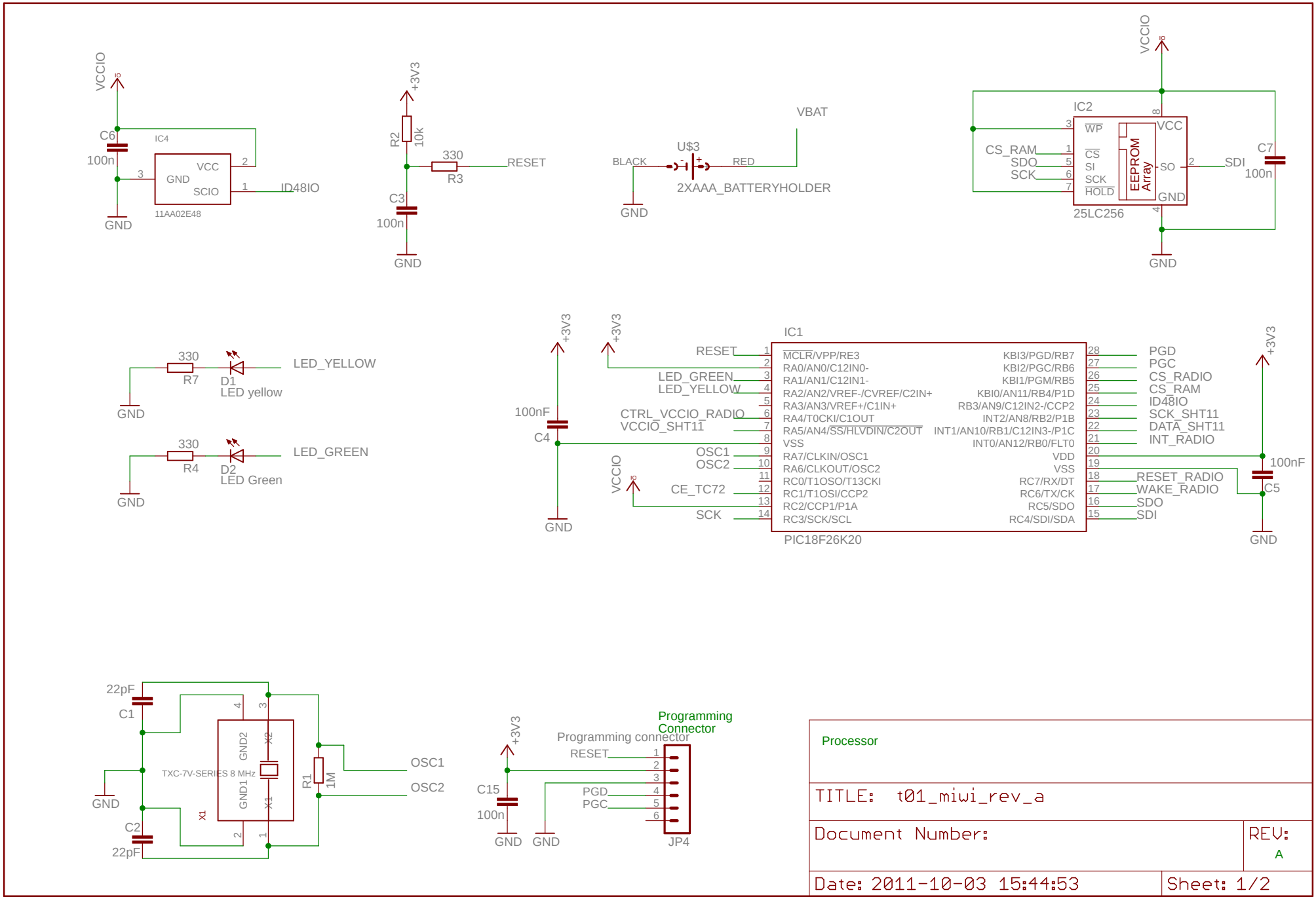
VCCIO
C6
100n
IC4
VCC
GND
SCIO
11AA02E48
ID48IO
GND
+3V3
R2
10k
330
R3
RESET
C3
100n
GND
VBAT
U$3
BLACK
RED
2XAAA_BATTERYHOLDER
GND
VCCIO
IC2
WP
CS
SI
SCK
HOLD
VCC
SO
GND
EEPROM Array
25LC256
CS_RAM
SDO
SCK
SDI
C7
100n
GND
330
R7
D1
LED yellow
LED_YELLOW
GND
330
R4
D2
LED Green
LED_GREEN
GND
+3V3
100nF
C4
GND
IC1
RESET
LED_GREEN
LED_YELLOW
CTRL_VCCIO_RADIO
VCCIO_SHT11
OSC1
OSC2
CE_TC72
SCK
MCLR/VPP/RE3
RA0/AN0/C12IN0-
RA1/AN1/C12IN1-
RA2/AN2/VREF-/CVREF/C2IN+
RA3/AN3/VREF+/C1IN+
RA4/T0CKI/C1OUT
RA5/AN4/SS/HLVDIN/C2OUT
VSS
RA7/CLKIN/OSC1
RA6/CLKOUT/OSC2
RC0/T1OSO/T13CKI
RC1/T1OSI/CCP2
RC2/CCP1/P1A
RC3/SCK/SCL
KBI3/PGD/RB7
KBI2/PGC/RB6
KBI1/PGM/RB5
KBI0/AN11/RB4/P1D
RB3/AN9/C12IN2-/CCP2
INT2/AN8/RB2/P1B
INT1/AN10/RB1/C12IN3-/P1C
INT0/AN12/RB0/FLT0
VDD
VSS
RC7/RX/DT
RC6/TX/CK
RC5/SDO
RC4/SDI/SDA
PIC18F26K20
PGD
PGC
CS_RADIO
CS_RAM
ID48IO
SCK_SHT11
DATA_SHT11
INT_RADIO
RESET_RADIO
WAKE_RADIO
SDO
SDI
+3V3
100nF
C5
GND
22pF
C1
GND
C2
22pF
TXC-7V-SERIES 8 MHz
GND2
GND1
X2
X1
R1
1M
OSC1
OSC2
+3V3
C15
100n
GND
GND
Programming Connector
Programming connector
RESET
PGD
PGC
JP4
Processor
TITLE: t01_miwi_rev_a
Document Number:
REV: A
Date: 2011-10-03 15:44:53
Sheet: 1/2

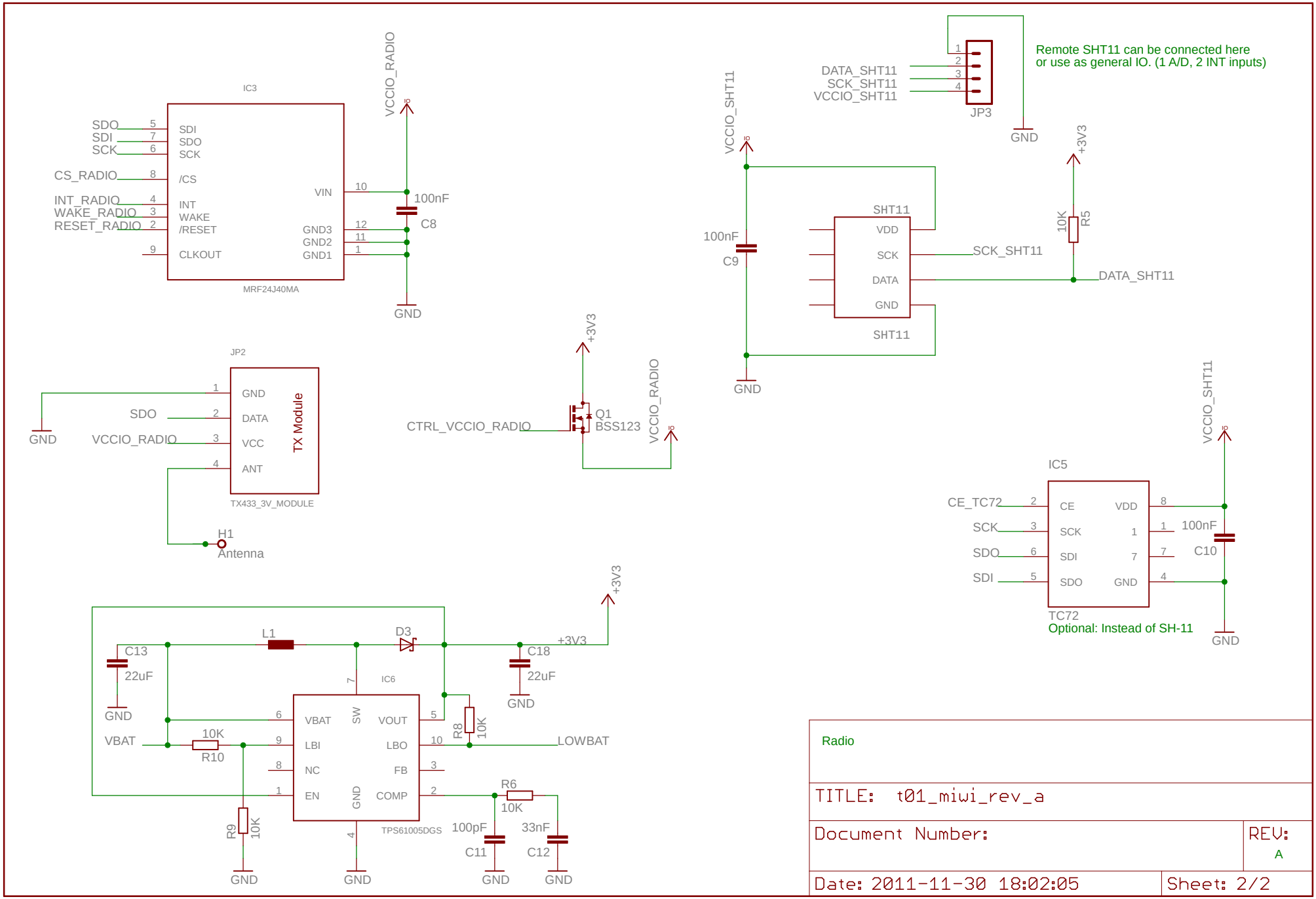

2011-11-30 18:02:13 C:\Users\akhe\Documents\development\hardware_zeus\802.15.4\tallin_miwi_temp_hygrometer\t01_miwi_rev_a.sch (Sheet: 2/2)